To prevent accidents and/or machine damage, read these instructions before installation or use. Use the dryer only as instructed in this owner's guide and installation instructions manual included with your dryer. Keep this guide for future reference

Front-Loading Dryer

DV 17540 NBL00
DV 17542

Owner's Guide & Installation Instructions

Blomberg

Please read this manual first!

Dear Customer,
We hope that your product, which has been manufactured in modern facilities and passed through strict quality control procedures, will give you the best results. Therefore, we advise you to read this manual thoroughly before using your product and keep it for future reference.

This operation manual will …

…help you use your machine in a fast and safe way.

- Please read the operating manual before installing and starting your machine.
- Particularly follow the instructions related to safety.
- Keep this operating manual handy. You may need it in the future.
- Please read all additional documentation supplied with this machine.
- Please note that this operation manual may be applicable for several models. Differences between models will be identified in the manual.

Explanation of symbols

Throughout this Operation Manual the following symbols are used:

⚠ **Important safety information**
This is the general warning sign. It is used to alert the user to potential hazards. All safety messages that follow this sign shall be obeyed to avoid possible harm to the user.

Caution, risk of electric shock

Caution, risk of fire

Caution, hot surface

Read the instructions

Useful information
Important information or useful hints for use.

01022013/2960310298_EN .indd

TABLE OF CONTENTS

1 Your Dryer 5

Overview 5

2 Important Safety Instructions 6

3 Installation Instructions 8

Electrical connection.....8
Grounding Instructions 9
Appropriate installation location 9
Minimum Installation Clearances.....10
Use on top of a washing machine.....10
Adjusting the feet.....11
Ventilation duct and connection 11

4 Operating Instructions 13

First Use.....13
Garments suitable for drying in the machine 13
Garments unsuitable for drying in the machine 13
Preparing clothes to be dried.....13
Correct load capacity 13
Control panel.....15
Turning on the dryer 16
Starting the Program 18
Progress of program.....18
Changing the program after the program has started 18
Technical Specifications 20

5 Quick Start-up Instructions 21

6 User maintenance and cleaning instructions 22

Lint filter 22

7 Troubleshooting 23

1 Your Dryer

Overview

Figure 1

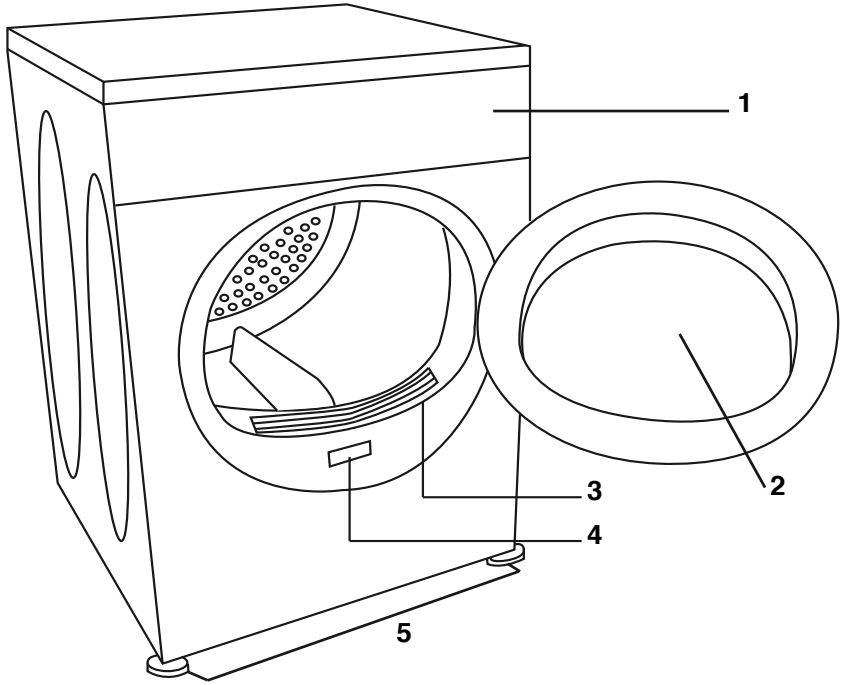

1 Control Panel

2 Loading Door

3 Lint Filter

4 Type label

5 Adjustable Feet

Specifications of this appliance may change without notice to improve the quality of the product. Drawings in this manual are schematic and may not match your product exactly.
Values stated on the machine labels or in the documentation accompanying it are obtained in the laboratory in accordance with relevant standards. Depending on operational and environmental conditions of the appliance, values may vary.

2 Important Safety Instructions

⚠ WARNING: To reduce the risk of fire, electric shock, or personal injury when using this appliance, follow the basic precautions including the following:

- Read all instructions before using the appliance. Otherwise, there may be the risk of personal injury or material damage. Additionally, any warranty and reliability commitment will become void.

⚠ This product has been designed for home use only.

- The appliance must be operated at temperatures between +5°C and +35°C.
- The appliance must not be installed behind a lockable door, a sliding door or a door with the hinges on the opposite side to that of the tumble dryer.
- Do not install or store this appliance where it will be exposed to weather.
- Do not tamper with the controls.
- Do not repair or replace any part of the appliance or attempt any servicing unless specifically recommended in the user-maintenance instructions or in published user-repair instructions that you understand and have the skills to carry out.
- Unplug the machine when it is not in use.
- Never wash the appliance with water! There is the risk of electric shock!
- Never touch the plug with wet hands.
- Never pull from the cable to unplug the machine.
- Do not operate the appliance if the power cord or plug is damaged.
- Never attempt to repair the machine yourself.
- For malfunctions that cannot be solved by information in the operating manual: Turn off and unplug the appliance and call an authorized service..
- This appliance must be grounded. In the event of malfunction or breakdown, grounding will reduce the risk of electric shock by providing a path of least resistance for electric current. This appliance is equipped with a cord having an equipment-grounding conductor and a grounded plug. The plug must be plugged into an appropriate outlet that is properly installed and grounded in accordance with all local codes and ordinances.

⚠ WARNING: Improper connection of the equipment-grounding conductor can result in a risk of electric shock. Check with a qualified electrician or service representative or personnel if you are in doubt as to whether the appliance is properly grounded.

- Power cord plug must be within easy reach after installation.
- To reduce the risk of fire or electric shock, do not use extension cords, multi-plugs or an adapter to connect the dryer to electrical mains.
- Do not modify the plug provided with the appliance: if it will not fit the outlet, have a proper outlet installed by a qualified electrician.
- If the power supply cord is damaged, it must be replaced by the manufacturer, its service agent or similarly qualified persons in order to avoid an electrical hazard.
- The appliance must not be operated unless it is repaired! There is the risk of electric shock!
- Ventilation openings in the base must not be obstructed by carpets, etc.
- Exhaust air must not be discharged into a flue used for exhausting fumes from appliances burning gas or other fuels.
- Adequate ventilation must be provided to avoid the back flow of gases into the room from appliances burning other fuels, including open fires.
- Do not dry articles that have been previously cleaned in, washed in, soaked in or spotted with gasoline, dry-cleaning solvents or other flammable or explosive substances as they give off vapors that could ignite

or explode.

- Do not use the tumble dryer if industrial chemicals have been used for cleaning.
- Do not dry unwashed items in the tumble dryer.
- Items that have been soiled with substances such as cooking oil, acetone, alcohol, gas, kerosene, spot removers, turpentine, waxes and wax removers should be washed in hot water with an extra amount of detergent before being dried in the tumble dryer.
- Items such as foam rubber (latex foam), shower caps, waterproof textiles, rubber-backed articles and clothes or pillows fitted with foam rubber pads should not be dried in the tumble dryer.
- Do not use fabric softeners or products to eliminate static unless recommended by the manufacturer of the fabric softener or product.
- The appliance may only be used for the drying of textiles that are marked accordingly.
- Undergarments that contain metal reinforcements should not be placed in a tumble dryer. Damage to the tumble dryer can result if the metal reinforcement come loose during drying.
- Before loading check all garments for lighters, coins, metal pieces, needles, etc.
- Fabric softeners, or similar products, should be used as specified by the fabric softener's instructions. The use of fabric softener sheets is not recommended.
- The final part of a tumble dryer cycle occurs without heat (the cool-down cycle) to ensure that the items are left at a temperature that ensures the items will not be damaged.

⚠ WARNING: Never stop the tumble dryer before the end of the drying cycle unless all items are quickly removed and spread out dissipate heat.

- Do not reach into the appliance if the drum is moving.
- Do not allow children to play on or in the appliance.Close supervision of children is necessary when the appliance is used near children.
- Young children should be supervised to ensure that they do not play with the appliance.
- Keep pets away from the appliance during the drying cycle.
- Before the appliance is removed from service or discarded, remove the door to the drying compartment.
- Close the loading door when you leave the area where the machine is located.
- This appliance is not intended for use by persons (including children) with reduced physical, sensory or mental capabilities, or lack of experience and knowledge, unless they are supervised or have been given instructions concerning the use of the appliance by a person responsible for their safety.
- Clean lint filter before or after each load.
- Keep area around the exhaust vent and adjacent surrounding areas free from the accumulation of lint, dust, and dirt.
- The interior of the appliance and exhaust ductwork should be cleaned periodically by qualified service personnel.
- Never use the dryer without the lint filter.
- At times when your dryer is not in use or after the laundry is taken out following the completion of drying process, turn off by using the On/ Off button. In cases when the On/ Off button is on (while the dryer is energized), keep the door of the dryer closed.
- For power saving in models with lamps, at times when your dryer is not in use, keep the door closed if the On/ Off button is pressed (if the dryer is energized).

SAVE THESE INSTRUCTIONS

⚠WARNING - Risk of fire

•The clothes dryer (“appliance‘) installation must be performed by a qualified installer.
•Install the appliance according to the manufacturer’s instructions and local codes.
•Do not install a clothes dryer with flexible plastic venting materials. If flexible metal (foil type) duct is installed, it must be of a specific type identified by the ap pliance manufacturer as suitable for use with clothes dryers. Flexible venting materials are known to collapse, be easily crushed, and trap lint. These conditions will obstruct the clothes dryer’s airflow and increase the risk of fire.
• To reduce the risk of severe injury or death, follow all installation instructions.

SAVE THESE INSTRUCTIONS

Electrical connection

Connect the appliance to a grounded outlet protected by a fuse or circuit breaker of suitable capacity.

4-wire receptacle (14-30R)	Dryer shipped with cord to fit this type 4 -wire receptacle
3-wire receptacle (10-30R)	If you have 3-wire receptacle, like this, a 3-wire dryer cord must be purc hased locally.

3-Wire Electrical Connection

If your receptacle is a 3-wire receptacle as shown below, you must obtain a 3-wire dryer cord. A dryer cord can usually be found at your local hardware supply, electrical supply or home center. Cord should have closed loop or upturned end wire terminating connectors.

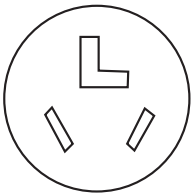

3- wire receptacle
(10-30R)

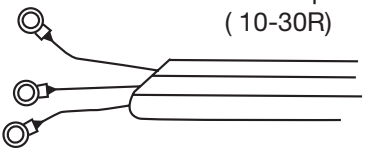

Typical 3- Wire Dryer Cord 240V/30 amp NEMA 10-30 Type SRDT

A If the dryer is installed in a mobile home, recreational vehicles, new branch-circuit installations or in areas where local codes do not permit grounding, only a 4-wire power supply cord shall be used.

To change the cord:
1. Make sure that the dryer is not plugged into any power outlet.

⚠ DO NOT plug end of dryer power cord into a live receptacle before connecting dryer power cord to dryer terminals and closing junction/splitter box as described below.

⚠ DO NOT repair old power supply cords. Power cord must be changed only by a qualified person. There is a risk of electric shock!

2. Remove the screw from the cover of the junction box located at the top rear of the dryer.
3. Remove the red, white and black wire from the terminal block.
4. Remove the green ground wire from the ground terminal.
5. Loosen the strain relief clamp holding the 4-wire cable.
6. Thread the 4-wire cable out through the strain relief clamp.
7. Thread the new 3-wire dryer cord through the strain relief clamp.
8. Attach the power cord Ground conductor (the center wire) to the terminal labeled N.

Connect the terminal labeled N and the Ground terminal labeled G with the supplied short cable. Tighten the terminals so that they securely hold the conductors.
9. Attach the two remaining power cord outer conductors to the 2 terminals labeled L. Tighten both screws so that the power conductors are securely held in place.
10. Tighten the strain relief so that the power cord cannot be moved.
11. Replace the cover on the junction box and fasten in place.

The dryer is now ready to be plugged into the 3-wire receptacle of the proper rating.

The receptacle should be located so that the plug and receptacle will be accessible with the dryer in its installed position.

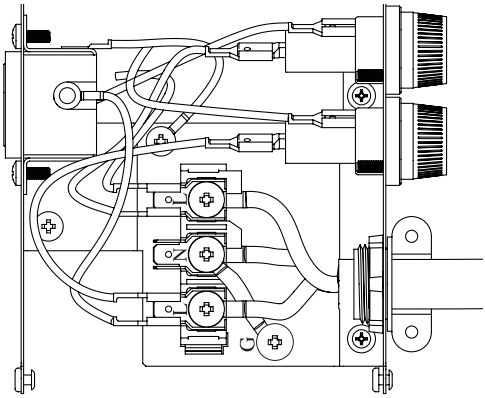

Grounding Instructions

This appliance must be grounded. In the event of malfunction or breakdown, grounding will reduce the risk of electric shock by providing a path of least resistance for electric current. This appliance is equipped with a cord having an equipment-grounding conductor and a grounding plug. The plug must be plugged into an appropriate outlet that is properly installed and grounded in accordance with all local codes and ordinances.
• Power cord plug must be within easy reach after installation.
• The voltage and the allowed fuse/breaker protection are specified in the section “Technical Specifications”.
• The stated voltage must match your mains voltage.
• Connection via extension cords or multi-plugs should not be made.
• The main fuse/breaker and switches must have a contact distance of minimum 3 mm.

⚠ A damaged power cable must be replaced by a qualified electrician.

⚠ **WARNING – Improper connection of the equipment-grounding conductor can result in a risk of electric shock. Check with a qualified electrician or service representative or personnel if you are in doubt as to whether the appliance is properly grounded. Do not modify the plug provided with the appliance: if it will not fit the outlet, have a proper outlet installed by a qualified electrician.**

⚠ The appliance must not be operated unless it is repaired! There is the risk of electric shock!

Appropriate installation location

•Install your appliance in environments that have no risk of freezing and in a stable and level position.
•Do not place your appliance on a long pile rug or on similar surfaces.
•Operate your appliance in a well-ventilated, dust-free environment.
•Do not block the air ducts in front of and under the machine.

⚠ Make sure that your appliance is not placed on the power cable.

⚠ Keep at least 0.6” (1.5 cm) from the edges of other furniture.

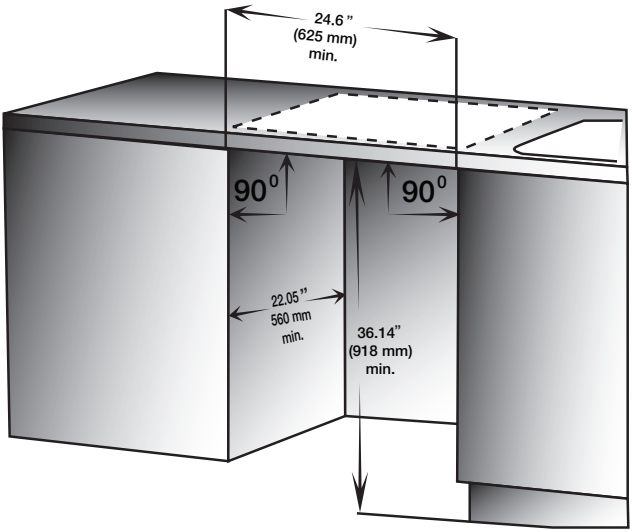

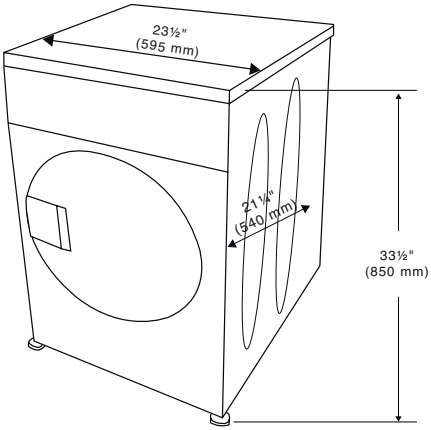

Minimum Installation Clearances

	Alcove or Built-under	Closet
Sides	0.59 in. (15 mm)	0.59 in. (15 mm)
Top	2.68 in. (68 mm)	2.68 in. (68 mm)
Rear	0.59 in. (15 mm)	0.59 in. (15 mm)
Front	0.20 in. (5 mm)	0.20 in. (5 mm)

Ventilation Requirements

Closet door must have 2 openings, one located 3.2 inches (8 cm) from bottom of door having a minimum area of 16 sq. inches (103 cm2) and the other one located 3 inches (7.5 cm) from top of door having a minimum area of 46 sq. inches (294 cm2).

Use on top of a washing machine

•A stacking-kit (Part no: 296 710 0100) should be used between the two machines for use on top of a washing machine. The stacking-kit should be installed by the Authorized Service provider.

•Place the appliance on a solid floor. If it is to

be placed on top of a washing machine, the approximate weight together may reach 397 lbs (180 kg) when they are full. Therefore, the floor must be capable of carrying the load placed on it!

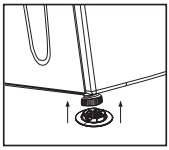

Adjusting the feet

In order to ensure that your appliance operates more silently and vibration-free, it must stand level and balanced on its feet. The front feet of the appliance can be adjusted. Balance the appliance by adjusting the feet.

1. Loosen the feet by hand.

2. Adjust them until the appliance stands level and firmly.

ⓘDo not use any tools to loosen the adjustable feet. Otherwise, they may be damaged.

ⓘNever unscrew the adjustable feet from their housings.

2 plastic pieces supplied together with the Operating Instructions prevent your appliance from slipping on wet and slippery surfaces. To install these plastic parts:

1. Tilt the appliance backwards.
2. Fit the plastic parts to the front adjustable feet. Press on the plastic parts to fix them in their places.
3. Check the balance of the appliance again and readjust the adjustable feet if necessary.

Ventilation duct and connection

Ventilation duct ensures exhaust of air from inside the appliance.
The vented dryer has 1 air outlet.

⚠Only rigid or flexible metal duct should be used for exhausting, unless the appliance has been checked for use with nonmetallic duct or the duct has been checked and found acceptable for use with clothes dryers.

• In Canada, the diameter of the duct to be used should be 4” (102 mm). In United States, the regulation for the required exhaust duct diameter must be followed.

Maximum duct length is given in the table below:

	Metal rigid duct
Maximum length	21 ft (6.5 m) + 2 elbows

To connect a ventilation duct;

1.Connect the air outlet metal duct to the spacer by turning it counter-clockwise.
2.Make the duct passages as shown the picture below.

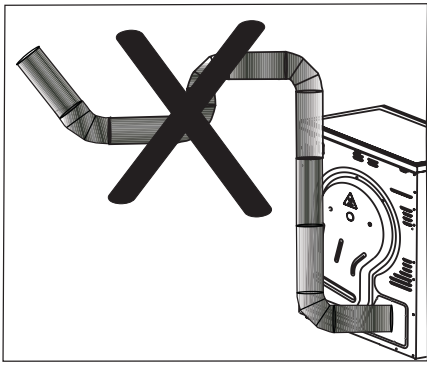

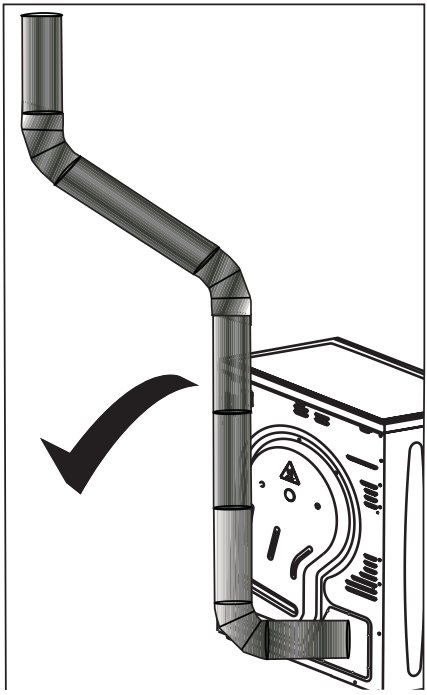

ⓘExhaust of humid air from the dryer into the room is to be avoided. It may damage the walls and furniture in the room.

ⓘThe ventilation duct can be routed outdoors via a window or it can be connected to the air outlet in a bathroom.

ⓘAir outlet duct must be extended directly outdoors. There must be a limited number of

elbows to not hinder air flow.
ⓘTo prevent water accumulation in the duct, make sure it is not folded on the floor.
ⓘIn Canada only those foil-type flexible ducts, if any, specificially identified for use with the appliance by the manufacturer shallbe used. In the United States, only those foil-type flexible ducts, if any, specifically identified for use with the appliance by the manufacturer and that comply with the Outline for Clothes Dryer Transition Duct, Subject 2158A, shall be used.

⚠The appliance should not be vented into a chimney, a wall, a ceiling, an attic, a crawl space or a concealed space of a building.
⚠Do not operate the appliance at the same time with heaters such as a coal or gas stove. Airflow may cause the chimney to flare up.

ⓘ Care must be taken not to pinch or bend the ducts.
ⓘ The end of the hose should not be bent, it should not be stepped on and it must not be folded between the drain and the machine.
ⓘThe total lenght of flexible metal duct shall not exceed 7.8 foot (2.4 m).
ⓘ The duct shall not be assembled with screws or other fastening means that extend inside the duct to catch lint.

Destroying packaging material

Packaging material can be dangerous to children. Keep the packaging materials out of the reach of children or dispose of them accordingly. Do not dispose of them together with normal domestic waste.
Packaging materials of your appliance are manufactured from recyclable materials.

4 Operating Instructions

⚠ **WARNING: To reduce the risk of fire, electric shock, or personal injury, read the IMPORTANT SAFETY INSTRUCTIONS before operating this appliance.**

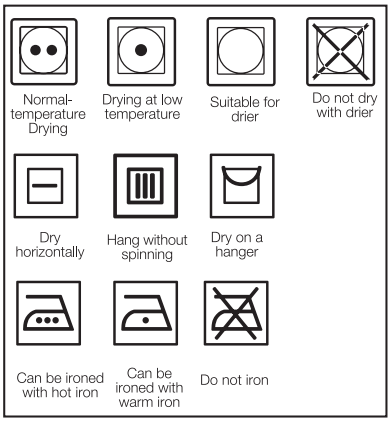

First Use

•When operating your machine for the first time check inside the drum for any foreign objects.
•Partly load the drum with wet pieces of clothes and let the machine run for approximately 15 minutes. This operation will clean the drum before loading garments.
•You may smell an unpleasant odor and excessive fiber/lint may accumulate during the first drying cycle.

Garments suitable for drying in the machine

Always follow the advice on garment labels. Dry only laundry having a label stating that they are suitable for tumble-drying.

Garments unsuitable for drying in the machine

•Items with metal attachments like, belt buckles and metal buttons can damage your dryer.
•Do not dry items like woolens, silk garments and nylon stockings, delicate embroidered fabrics, garments with metal accessories and items like sleeping bags in the machine.
•Garments made of delicate and valuable fabrics as well as lace curtains can be permanently wrinkled. Do not dry these in your machine!
•Do not dry items made of hermetic fibers such as pillows and quilts in the dryer.
•Garments made of foam or rubber may deform.
•Do not dry clothes containing rubber in the machine.
•Do not dry clothes exposed to petroleum, oil, combustible or explosive agents in the dryer even if they are washed beforehand.
•Overly wet laundry or laundry with dripping water must not be put into the dryer.

Preparing clothes to be dried

•All laundry must be spun at the highest possible spin speed the washing machine allows for the textile type.
•Laundry may be tangled after washing. Separate laundry before placing them into your dryer.
•Sort laundry according to their types and thicknesses. Dry similar types of laundry together.

Correct load capacity

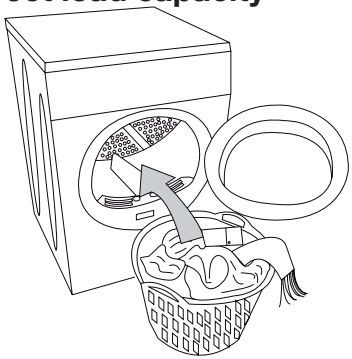

ⓘ Please consult the information in the “Program Selection” section. Always start the program in accordance with the maximum load capacity.
⚠ Adding laundry to the dryer over the level shown in the figure is not recommended. Drying performance will be reduced when the machine is overloaded. Doing so may damage your machine and your clothes.

ⓘ Place garments into the drum loosely so they won’t get tangled.

ⓘ Large items (e.g. bed sheets, quilt covers, large tablecloths) may bunch-up. Stop the machine 1 or 2 times during drying process to separate any bunched-up laundry.

The following weights are given as examples.

Home articles	Approximate weights (gr)
Cotton quit covers (double)	1500
Cotton quit covers (single)	1000
Bed sheets (double)	500
Bed sheets (single)	350
Large tablecloths	700
Small tablecloths	250
Tea napkins	100
Bath towels	700
Hand towels	350
Garments	**Approximate weights (gr)**
Blouses	150
Cotton shirts	300
Shirt	200
Cotton dresses	500
Dresses	350
Jeans	700
Handkerchiefs	100
T-Shirts	125

Control panel

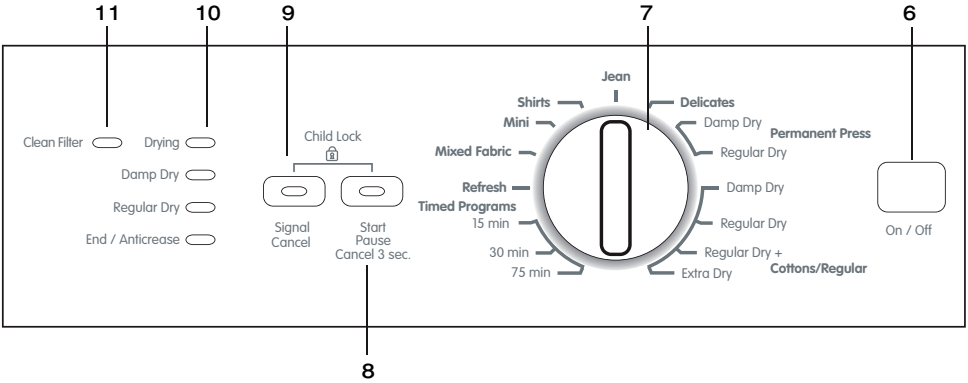

6. On/Off button
7. Program selector knob
8. Start/Pause/Cancel button
9. Cancel Audio Warning
10. Program follow-up indicator
11. Filter cleaning warning LED

Loading door

•Open loading door.
•Place laundry items loosely into the dryer.
•Push the loading door to close. Make sure that no items are caught in the door.

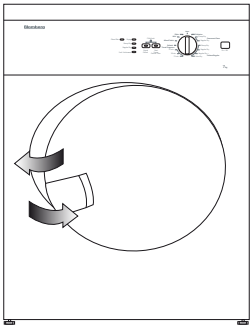

Turning on the dryer

Prepare dryer for program selection by pressing the On/Off button.

ⓘPressing the On/Off button does not mean the program has started. Press the "Start/ Pause/Cancel" button of the dryer to start the program.
Program selection

Extra Dry	Drying at a high temperature, only for cotton laundry. Thick and multi layered laundry (e.g. towels, linens, jeans) are dried in a way that they do not require ironing before being put away.
Regular Dry / Ready to Wear	Normal laundry (e.g. tablecloths, underwear) are dried in a way that they do not require ironing before being put away.
Regular Dry+/ ready to Wear Plus	Normal laundry (e.g. tablecloths, underwear) are dried in a way that they do not require ironing before being put away, but more than those in the ready to wear option.
Damp Dry / Ready to Iron	Normal laundry (e.g. shirts, dresses) are dried in a way that they are ready to be ironed.

For optimum drying results the dryer offers different program groups and additional options. There are automatic sensor programs for different types of textiles and timer programs.
Choose the appropriate program according the type of textile from the table below it also includes the level of dryness. Select the desired program with the program selector knob.
ⓘAlways select the highest allowed temperature for drying. High temperature will ensure energy and time savings.

Main programs

Depending on the type of textile, the following main programs are available:

•Cottons / Regular (max. 7 kg)

Durable clothing can be dried with this program at a normal temperature. It is recommended for cotton items (e.g. bed sheets, quilt cover, underwear).

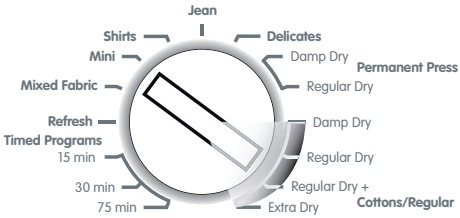

•Permanent Press / Synthetics (max. 3.5 kg)

Less durable clothing can be dried with this program at a at a lower temperature compared to the cottons program. It is recommended for synthetic clothing (e.g. shirts, blouses, synthetic/cotton blended garments).

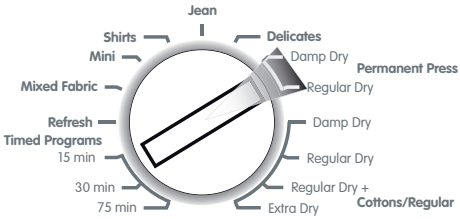

ⓘ Do not dry curtains or lace in the dryer.

ⓘ **Anti-creasing**

A 2-hour anti creasing program to prevent laundry from creasing will be activated if the laundry is not taken out after the program ended. This program rotates the laundry in 10-minute intervals to prevent wrinkling.

Special programs

For special cases, there are also extra programs available:

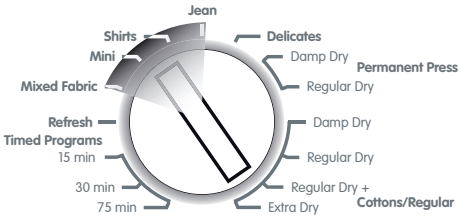

ⓘ Additional programs may differ according to the model of your dryer.

•Automatic Dry / Mixed Fabric (max. 3.5 kg)

Mix program (Regular Dry) is for mixed loads with different types of fabrics. Mixed laundry can be dried at a lower temperature.

ⓘ It is recommended to use a cloth bag to avoid certain delicate garments and laundry from being wrinkled or damaged.

ⓘ Remove garments immediately from the dryer and hang them after the program ends in order to prevent wrinkling.

•Mini (max. 1.2 kg)

The cottons that are spun at high speeds in your washing machine can be dried with this program.

ⓘ In order to obtain better results from the dryer programs, your laundry must be washed with suitable program and spun at the recommended spin speeds in your washing machine.

•Shirts (max. 1.5 kg)

Dries the shirts in a more sensitive way so that they are less wrinkled and ironed easily.

ⓘ Shirts may contain little amount of dampness at the and of the program. It is advised not to leave the shirts in the dryer.

•Jean (max. 4 kg)

The jeans that are spun at high speeds in your washing machine can be dried with this program.

•Delicates (max. 1.75 kg)

Very delicate laundry (silk blouses, fine underwear, etc.) can be dried at a lower temperature that are suitable for drying or for laundry that is advised to be hand-washed.

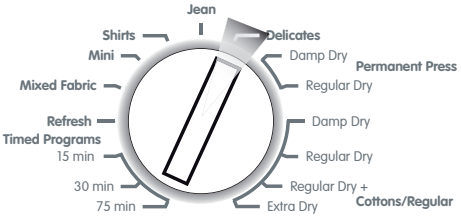

•Refresh / Ventilation

Only cool air circulation is performed for 10 minutes without providing hot air.

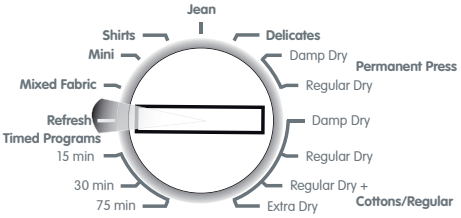

•Timed Programs

One of the 15 min., 30 min., 75 min. timer programs can be selected to reach the desired final drying level at low temperatures. The program dries for the selected time regardless of dryness.

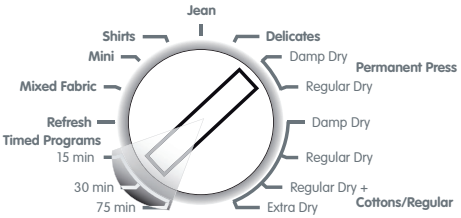

Starting the Program

1. Press the “Start/Pause/Cancel” button to start the program.
2. The Start/Pause/Cancel button will light up to indicate that the program has started.

Progress of program

Progress of a running program is shown through the program follow-up indicator.
At the beginning of each program step, the related lamp will light up and the lamp of the completed step will turn off.

“Drying”:
- Drying level will be illuminated during the whole drying process until the dryness reaches “Damp Dry / Ready to Iron”.

“Damp Dry / Ready to Iron”:
- Lamp lights when the dryer reaches the “Damp Dry / Ready to Iron” step and remains lit until the next step.

“Regular Dry / Ready to Wear”:
- Lamp lights when the dryer reaches the “Regular Dry / Ready to Wear” step and remains lit until the next step.

“End / Anticrease”:
- The lamp lights when the program comes to an end and the anti-creasing function is activated.

ⓘ If more than one lamp lights or flashes constantly, it means that there is a malfunction or a failure (Please see Troubleshooting).

Changing the program after the program has started

Press and hold the Start/Pause/Cancel button for around 3 seconds to Cancel the program currently running.
Select another program by rotating the program knob.
Press the “Start/Pause/Cancel” button again to start the new program.
ⓘ The program which is selected first will go on even if the program selector knob is moved and another program is selected while the dryer is operating. You must cancel the current program to change the drying program.

⚠ As the inside of the dryer will be excessively hot when you cancel the program when the dryer is running, activate the ventilation program to cool it down.

⚠ If the dryer is stopped during any drying program, and if the position of the program selector knob is changed, a tone will be heard (if the Cancel Audio Warning function is not selected). The dryer will not start even if the Start/Pause/Cancel button is pressed, unless the program selector knob is returned to the initial program. The paused program must be cancelled in order to change the drying program.

Adding/removing laundry in stand-by mode

In order to add or take out laundry after the start of the program;
1. Press the Start/Pause/Cancel button to switch the dryer to Pause mode. the drying process will stop.
2. Open the door at the Pause position and close it again after adding or taking out laundry.
3. Press the “Start/Pause/Cancel” button to restart the program.

ⓘ Laundry may be added or taken out during a drying process, but interrupting drying continuously will extend the program's time and increase energy consumption. Therefore, it is recommended to add all laundry before the drying program is started.

Auxiliary functions

Cancel Audio Warning Signal

Your dryer will send out a tone when the program comes to an end. If you do not want to hear this, you need to press the Cancel Signal button. The relevant lamp will light when this button is pressed and the tone will not activate when the program ends.

ⓘ You can select this function either before or after the program starts.

Child-proof lock

There is a childproof lock to prevent any program interruption due to the pressing of keys while a program is running. The loading door and all buttons except the “On/Off” key on the panel are deactivated when the child-proof lock is active.
In order to activate the childproof lock, pres the Start/Pause/Cancel and Cancel Audio Warning buttons at the same time for 3 seconds.
To start a new program after the program ends or to stop a program, the childproof

lock should be deactivated. To deactivate the childproof lock, press the same two buttons for 3 sec.

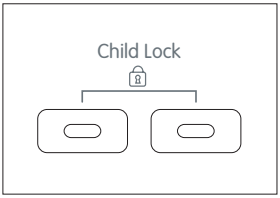

ⓘ 2 beeps when activating and 1 beep when deactivating the child-proof lock will be heard.

Warning indicators

Filter cleaning

A warning lamp will light up to remind filter cleaning after a program finishes.

ⓘ If the filter cleaning warning lamp flashes, please refer to Troubleshooting.

End of program

The End/Anticrease and Clean Filter warning lamps on the program follow up indicator will light up when the program ends. The door can be opened and the dryer becomes ready for another load.
Press the On/Off button to shut down the dryer.

ⓘ A 2-hour anti creasing program to prevent laundry from creasing will be activated if you do not take the laundry out after the program has ended.

⚠ Clean the filter after each load!

ⓘ At the end of the program, it is recommended to press the On-Off button Off before unloading the dryer.

Technical Specifications

Model	Vented Dryer with electronic sensor control
Height (in)	33 1/2
Witdth (in)	23 1/2
Depth (in)	21 1/4
Height adjustment of feet (in)	1/5
Net weight (plastic front door usage) (lbs)	73
Net weight (glass front door usage) (ıbs)	78
Voltage / Frequency	208-240V ~ 60 Hz
Connected load	2000-2400 W

This appliance's packaging material is recyclable. Help recycle it and protect the environment by dropping it off at recycling locations provided for this purpose. Your appliance also contains a large amount of recyclable material. It is marked with this label to indicate that used appliances should not be mixed with other waste. This way, the appliance recycling organised by your manufacturer will be done under the best possible conditions, in compliance with European Directive 2002/96/EC on Waste Electrical and Electronic Equipment. Contact your local government or your retailer for used appliance collection points closest to your home. We thank you for doing your part to protect the environment.

5 Quick Start-up Instructions

1. Open loading door.

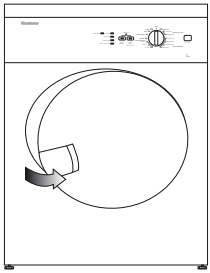

2. Check filter.

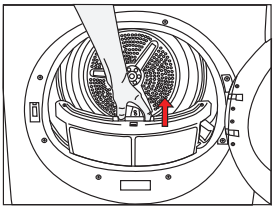

3. Load laundry loosely into the drum.

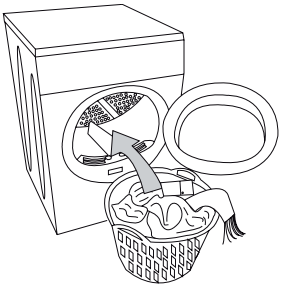

4. Push loading door closed. Ensure no items are caught in the door.

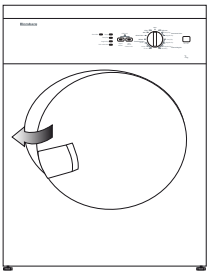

5. Push the ON / OFF button to ON.

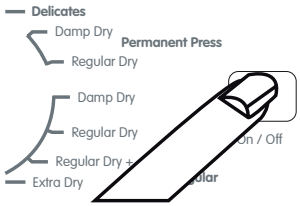

6. Select the appropriate Program.

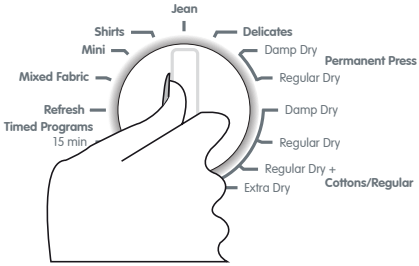

7. If necessary, select additional functions.

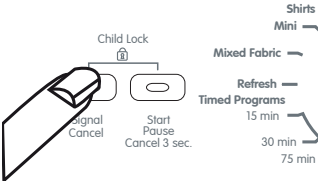

8. Push the start button.

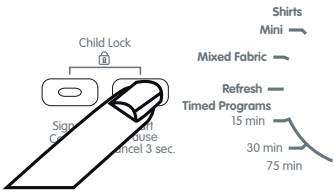

6 User maintenance and cleaning instructions

Lint filter

Lint and fibers released from the laundry in to the air during the drying cycle are collected in the “Lint Filter”.

ⓘ Fibres and lint are formed during wearing and washing.
⚠ Always clean the filter after each drying cycle.

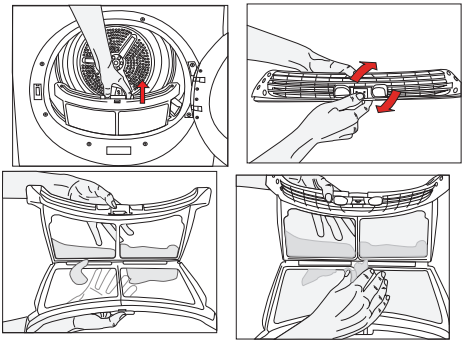

To clean the Filter;
1. Open loading door.
2. Remove the lint filter by pulling it up and open the filter.
3. Clean lint, fiber, and by hand or with a soft piece of cloth.
4. Close the filter and put it back in place.

ⓘ You can clean the filter and filter area with a vacuum cleaner.
ⓘ Clogging may arise on the filter surface after using your machine for some time; if this occurs, wash the filter with water and dry it before using again.

Sensor

There are humidity sensors in your machine that detect whether the laundry is dry or not.
For sensor cleaning;
1. Open loading door.
2. Allow machine to cool off if drying has been done recently.
3. Wipe the metal sensors with a soft cloth dampened with vinegar and dry the sensors afterwards.

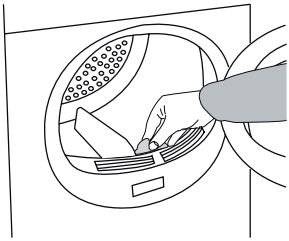

ⓘ Clean the metal sensors at regular intervals (4 times a year).
⚠ Never use solvents, cleaning agents or similar substances when cleaning as these might cause fire and/or an explosion!

7 Troubleshooting

Problem	Cause	Explanation / Solution
Drying process takes too long.	Lint filter may not have been cleaned.	* Clean the lint filter. * Meshes of the filter may be clogged. Wash with water.
Dryer does not switch on or the program does not start. Dryer does not start when set.	* It may not plugged in. * The loading door may be ajar. * Program may not be set or the “Start/Pause/Cancel” button may not have been pressed. * “Childproof lock” may be activated.	* Make sure that the dryer is plugged in. * Make sure the loading door is properly closed. * Make sure the program has been set and it is not in “Pause” mode. * Deactivate the childproof lock.
Program is interrupted for no reason.	* The loading door may be ajar. * Electricity may be cut off.	* Make sure the loading door is properly closed. * Press the “Start/Pause/Cancel” button to start the program.
Laundry has shrunk, become felted or has deteriorated.	* A program not suitable for the laundry type might have been used.	* Dry only the laundry which is suitable for drying in the dryer. First check the labels on the clothes. * Select a program a suitable low temperature setting for the laundry type to dry the clothes.
“End / Anticrease” LED flashes.	* The 2-hour anti creasing program to prevent laundry from wrinkling may have been activated.	* Turn off the dryer and take the laundry out of the dryer.
“End / Anticrease” LED is on.	* Program has come to an end.	* Turn off the dryerand take the laundry out of the dryer.
“Filter cleaning” LED flashes.	* Lint filter may not have been cleaned.	* Clean the lint filter. * Meshes of the filter may be clogged. Wash with water.
The “Drying” LED flashes.	* A heat sensor failure has occurred. dryer ends the program without heating.	* Turn off the dryer and remove the laundry. Call the authorized service.

⚠ Call an authorized service if the problem persists.